B

LINEAR BALL BUSHING

B

Contents

Components and Features B-02
Application B-02
Types and Characteristics B-03
Part Number B-05
Standard Tolerance B-05
Load rating and Travel Life B-05
Equivalent factor for Linear Bushing B-07
Short Stroke Applications B-08
Lubrication & Friction B-08
Assembly B-09
Tolerance of Housing Bore B-09
Clearance of Outer Sleeve & LM Shaft B-09
Mounting B-10
Retaining Ring for Mounting B-10
Caution in Use B-12
LM Type B-14
LME Type B-16
LMF / K/H Type B-18
LMF / K□L Type B-20
LM□L Type B-22
LME□L Type B-22

Linear Ball Bushing

WON Linear Ball Bushing, LM type is the linear motion system with unlimited stroke by applying with LM shaft. Because of the point contact between Balls and LM shaft, minimum friction can be acquired and that can give you the high precision motion.

Components and Features

As shown in Fig.1 WON Linear Ball Bushing serve the alignment of the balls toward the LM shaft by the single retainer and cylindrical shape of raceway. Outer sleeve is made of high-carbon chromium bearing steel, and inner and outer grinding process are applied after heat treatment.

■ Interchangeability

The dimensions of WON Linear Ball Bushing are standardized to have full interchangeability. LM shaft is provided with the cylindrical grinding to have high precision fitting clearance.

■ Rigidity Outer Sleeve

Hardened and precisely ground outer sleeve is made of bearing steel, and can be directly assembled with the needle bearing on outer surface.

■ High precision Retainer

The single body retainer guides 4~6 ball circuits, and it gives the precision guiding against the balls moving direction and smooth motion.

Application

WON Linear Ball Bushing is widly used in precision equipments; computer and peripheral equipments, measuring equipments, auto recording equipments, and 3D measuring equipments, and linear motion system in machine for mass production; multi-axis drilling machines, punching press, tool grinders, auto-gas cutters, printing machines, card selectors, food packing machines, and etc.

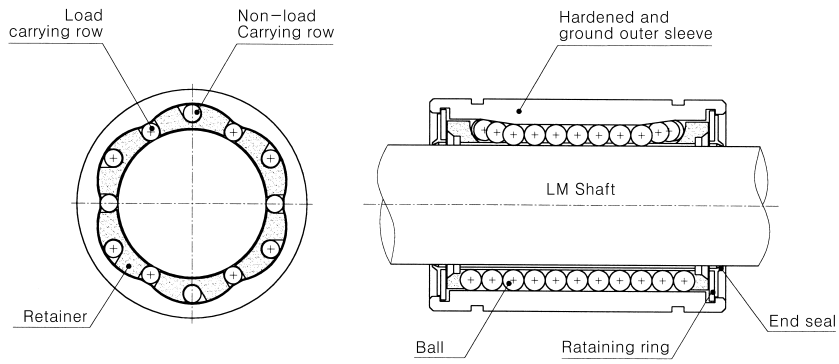

Fig. 1 Linear Ball Bushing

Types and Characteristics

Classification	Type	Shape and feature	
Linear Ball Bushing	Standard LM LME		• Cylindrical shape with precision dimension for smoother linear movenent.
	Open type LM□OP LME□OP		• One ball circuit is removed from standard type which provide maximum rigidity and stiffness when combined with Support Rail Unit.
	Adjustable clearance type LM□AJ LME□AJ		• Outer sleeve is slotted in axial direction to adjust the clearance between shaft and Linear Bushing.
	Long type LM□L LME□L		• Two retainers are installed in Long type series for severe moment loads.

Classification	Type	Shape and feature	
Flange type Linear Ball Bushing	Circular type LMF	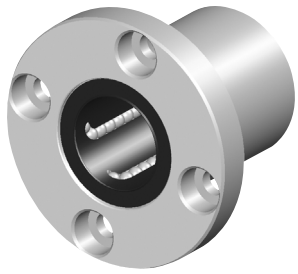	• Single-bodied Flange with mounting holes. • Easy installation and compactness.
	Square type LMK	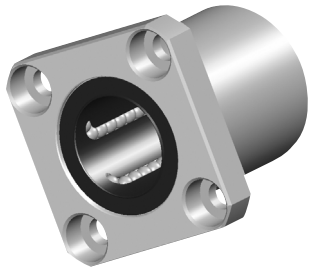	• More compact design is available due to the lower center height.
	Oval type LMH	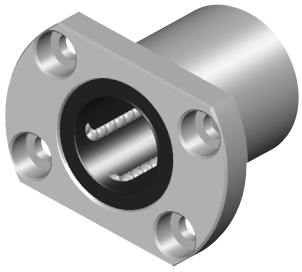	• The most compact design is available due to the lowest center height.
	Flanged long type LMF□L LMK□L	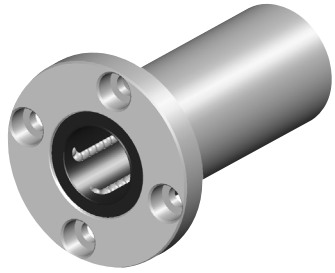	• Two retainers are installed in Flanged Long type series for severe moment loads.

Part Number

LM □ □ 20 □ UU □□

WON Linear Ball Bushing

Model
- – : Standard Series
- E : European Series

Flange Option
- – : No Flange
- F : Circular type
- K : Square type
- H : Oval type

Nominal Shaft Diameter

Type
- – : Standard
- L : Long

Seal
- – : No Seal
- U : One side Seal
- UU : Both side Seal

Type
- – : Closed type
- OP : Open type
- AJ : Adjustable type

Standard Tolerance

The tolerance of working bore diameter, outside diameter, and length are specified on the tables in this web site, and the value of working bore diameter and outside diameter for adjustable and open types are the obtained value before slotting process.

Load rating & Travel Life

The load rating of WON Linear Ball Bushing can be affected by the balls orientation against the load. The basic load rating in the table is the load rating of Linear Ball Bushing when one (1) ball circuit is just beneath the load. As shown in Fig 2. If the balls are located on symmetrical position against the load, the load rating will be increased and the travel life will be extended.

$$L = \left(\frac{f_H \cdot f_C \cdot f_T}{f_W} \times \frac{C}{P} \right)^3 \times 50$$

$$L_{100} = \left(\frac{f_H \cdot f_C \cdot f_T}{f_W} \times \frac{C_{100}}{P} \right)^3 \times 100$$

L	: Travel life	(km)
L_{100}	: Travel life	(km)
C	: Basic dynamic load rating	(N)
C_{100}	: Basic dynamic load rating	(N)
P	: Applied load	(N)
f_H	: Hardness factor	
f_W	: Load coefficient	
f_C	: Contact factor	
f_T	: Temperature factor	

Fig. 2 Load ratings and Orientation of Balls

No. of Ball Rows	Orientation of Balls	
	Max. Load rating	Min. Load rating
4	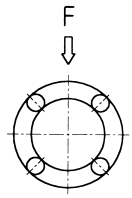	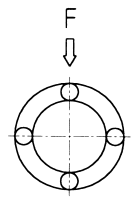
	F=1.41×C	F=C
5	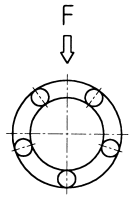	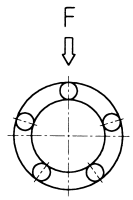
	F=1.46×C	F=C
6	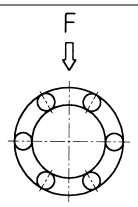	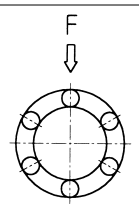
	F=1.26×C	F=C

C : Load rating specified on the table

● If a Linear Bushing or two Linear Bushings are suffered by the moment load, the calculation of the equivalent radial load is required.

$$P_U \fallingdotseq K \cdot M$$

P_U : Equivalent radial load (N)
(when the moment is applied)
K : Equivalent factor (Refer to table.1~3)
M : Applied moment (N · mm)
Pu should be upto basic load rating

● If the moment load and the radial load are applied, the travel life can be calculated by the sum of the moment load and the radial load.From the above equations, the stroke and number of strokes per minute are constant, the travel life can be calculated by the following equation.

$$L_h = \frac{L \times 10^3}{2 \times \ell_s \times n_1 \times 60}$$

L_h : Travel life (hr)
ℓ_s : Stroke (m)
n_1 : Number of strokes per minute (o.p.m)

● When short stroke is applied, travel life is calculated by basic dynamic load rating multiplied factor Kc on Fig. 3.

■ Calculation Example

The Maximum applied load and the travel life are the most important factors for choosing a proper size of Linear Bushing. Belows are the sample calculations of the expecting travel life and choosing a proper Linear Bushing.

-Working conditions-

- Applied load : 250N (P)
- Stroke : 0.250m (ℓ_s)
- Number of strokes per minute : 60 (n_1)
- Shaft hardness : HRC 60 (f_H=1.0)
- Operating speed :

$$V = 2 \times \ell_s \times n_1$$
$$= 2 \times 0.250 \times 60$$
$$= 30 \text{ m/min} \quad (f_W = 1.6)$$

all other factors(f_C, f_T)are considered as 1.0.

■ Calculation of expected Travel Life

Assuming the basic dynamic load rating is based on travel life of 50km and all other factor is1.0, you choose the Linear Bushing size that you can expect the travel life. Let's try LM40UU with the above working conditions.

$$L = \left(\frac{1.0 \times 1.0 \times 1.0}{1.6} \times \frac{2,150}{250}\right)^3 \times 50$$

$$\fallingdotseq 7,764 \text{ km}$$

$$L_h = \frac{7,764 \times 10^3}{2 \times 0.250 \times 60 \times 60}$$

$$\fallingdotseq 4,313 \text{ hours}$$

■ Choosing a proper Linear Bushing

Let's assume our design travel life is 15,000hours;
$L = 15,000 \times 2 \times 0.250 \times 10^{-3} \times 60 \times 60 = 27,000$km

$$C = \frac{250 \times 1.6}{1.0 \times 1.0 \times 1.0} \times \sqrt[3]{\frac{27,000}{50}}$$

$$\fallingdotseq 3,257 \text{ N}$$

So, the proper Linear Bushing for above condition is LM50UU which has 3,822N(390kgf) as the basic load rating.

Equivalent factor

Table 1 Equivalent factor for LM type

Part No.	Equivalent factor : K	
	Single	Double
LM 5	1.253	0.178
LM 6	0.553	0.162
LM 8S	0.708	0.166
LM 8	0.442	0.128
LM 10	0.389	0.101
LM 12	0.389	0.097
LM 13	0.343	0.093
LM 16	0.279	0.084
LM 20	0.257	0.071
LM 25	0.163	0.054
LM 30	0.153	0.049
LM 35	0.143	0.045
LM 40	0.117	0.040
LM 50	0.096	0.032
LM 60	0.093	0.028

Note) the Equival factors for LMF/K/H and SH types are same as LM type.

Table 2 Equivalent factor for LM-L type

Part No.	Equivalent factor : K
	Single
LM 5L	0.223
LM 6L	0.201
LM 8L	0.151
LM 10L	0.118
LM 12L	0.113
LM 13L	0.107
LM 16L	0.096
LM 20L	0.082
LM 25L	0.060
LM 30L	0.053
LM 35L	0.050
LM 40L	0.043
LM 50L	0.034
LM 60L	0.031

Note) the Equival factors for LMF/K/H-L types are same as LM-L type.

Table 3 Equivalent factor for LME type

Part No.	Equivalent factor : K	
	Single	Double
LME 5	0.669	0.123
LME 8	0.514	0.116
LME 12	0.389	0.090
LME 16	0.343	0.081
LME 20	0.291	0.063
LME 25	0.209	0.052
LME 30	0.167	0.045
LME 40	0.127	0.039
LME 50	0.105	0.031
LME 60	0.093	0.024

Note) the Equival factors for LMEF/K/H and SH types are same as LM type.

Short stroke Application

In applications, when the stroke is short, the life of the shaft is shorter than that of the Linear Bushing. In a short stroke applications, the required dynamic load rating must be multiplied by the factor Kc as found on Fig. 3, below.

Fig. 3 Short stroke correction factor (Kc)

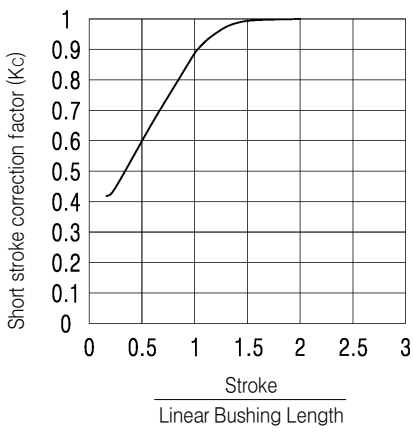

Lubrication & Friction

■ Lubrication

Usually, Linear Bushing is used with grease lubrication or oil lubrication, but in some case, it is used without any lubrication.

■ Grease Lubrication

Before applying the grease, the anticorrosive oil must be removed by kerosene or organic solvent, and apply the grease after drying. Must apply grease direcily on the ball for a both side sealed type (..UU). And apply same as above or on tne shaft directly for a without sealed type. Lithium soap radical of viscosity mark No. 2 is recommended for use.

■ Oil Lubrication

There is no need to remove anticorrosive oil when oil is used for lubrication. ISO visosity grade VG15~100 oil is usually used according to the operating temperature.

Operating Temp.	Viscosity
−30℃~50℃	VG 15~46
50℃~80℃	VG 46~100

The turbine oil, machine oil, and spindle oil are usually used as lubrication oil. Drop the oil on the shaft for lubrication, or supply it through the oil hole provided on the housing (Fig. 4). Contact WON for Linear Bushing with lubrication hole for users demands.

Fig. 4

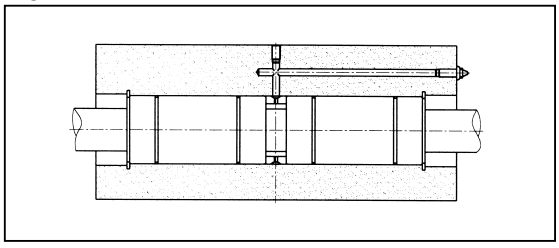

Because the seals may remove the oil on

shaft, oil dropping lubraication is not recommanded for both sides seal type.

■ Coefficient of Friction

The balls in a Linear Bushing is the rolling elements, so the balls can reduce the frictional resistance. Static friction is particularly very low, and there is just little difference between static and dynamic friction, so, the stick–slip does not occur. Such low friction makes submicron feeding possible. The normal friction coefficient is on Fig .5, and the friction resistance can be calculated by the following equation.

$$F = \mu \cdot P + fs$$

F : Friction resistance factor (N)
fs : Resistant of Seal (1.3~204N)
P : Applied load
(Perpendicular load against shaft core) (N)
μ : Friction coefficient(Static or dynamic)

Fig. 5 Coefficient of Friction

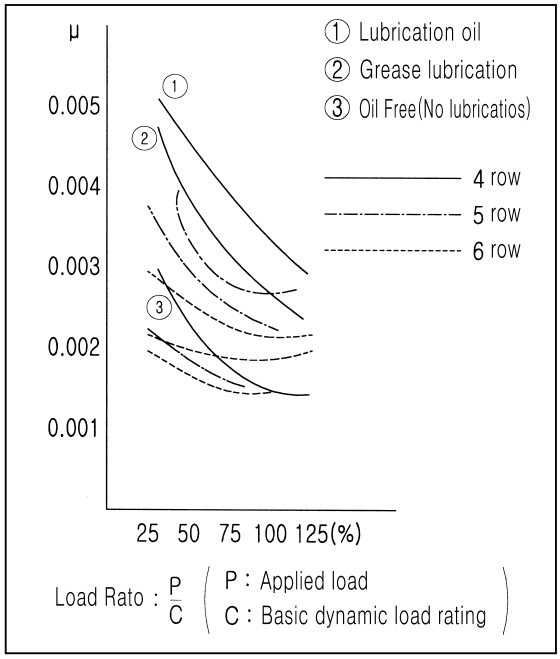

Assembly

Tolerance of House Bore

Recommended tolerances of Housing bore for WON Linear Bushing are in Table 4 Normal fit is standard, but for without clearance, press fit is also available.

Table 4 Tolerance for House Bore

Type		Case	
Part No.	Grade	Normal Fit	Pressed Fit
LM	High(H)	H7	J7
LME	–	H7	K6, J6
LMF LMK LMH LM-L LMF-L LMK-L LMH-L LMFM	–	H7	J7

Clearance of Outer Sleeve and Shaft

Normal fit is standard for using of Linear Bushing with LM shaft, and for without clearance, Tight fit is also available.

Table 5 Tolerance for Shaft Diameter

Type		LM Shaft	
Part No.	Grade	Normal Fit	Tight Fit
LM	High(H)	f6, g6	h6
LME	–	h7	k6
LMF LMK LMH LM-L LMF-L LMK-L LMH-L	–	f6, g6	h6

Note 1) When clearance after installation is required to minus, Radial clearance premission value in the table should not be exceed.
Note 2) Axial clearance of SH, SHW, SHO type are same as High grade.

Mounting

High holding strength toward. LM shaft direction is not required, but mounting with press fit only for mounting is not recommended.Please see the table 4. for tolerance of Housing Bore.

■ Standard type

Possible mounting methods are illustrated in Fig. 6 and Fig. 7. Mount a Linear Bushing with retaining rings and cover plates.

Fig. 6 Mounting with retaining rings

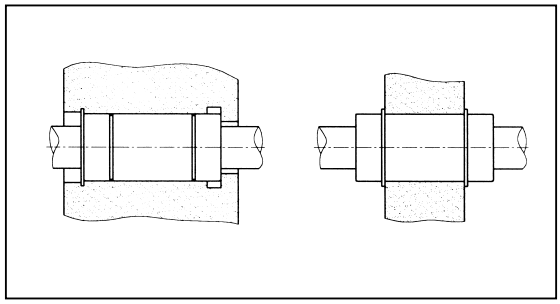

Fig. 7 Mounting with cover plates

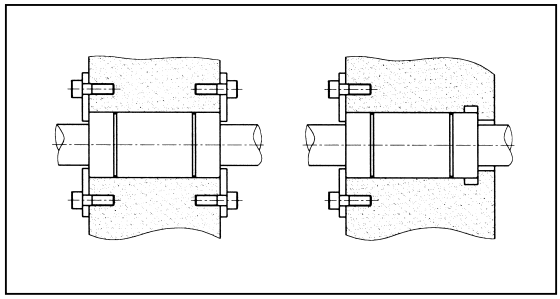

Retaining rign for Mounting

Retaining rings for mounting LM type WON Linear Bushing are used as shown in the table below.

Part No.	Retaining ring			
	External (for Shaft)		Internal (for Bore)	
	C type	Needle type	C type	Needle type
LM 5	10	10	10	10
LM 6	12	12	12	12
LM 8	–	15	15	15
LM 8S	–	15	15	15
LM 10	19	19	19	19
LM 12	21	21	21	21
LM 13	23	22	23	–
LM 16	28	–	28	28
LM 20	32	–	32	32
LM 25	40	40	40	40
LM 30	45	45	45	45
LM 35	52	52	52	52
LM 40	–	60	60	60
LM 50	–	80	80	80
LM 60	–	90	90	90

note) The information in the table are common for LM and LM−L type

■ Setscrew Mounting Prohibited

Mounting a Linear Bushing with a setscrew as shown in Fig. 8 will cause deformation of the outer sleeve and should be avoided.

Fig. 8 Mounting with Setscrew

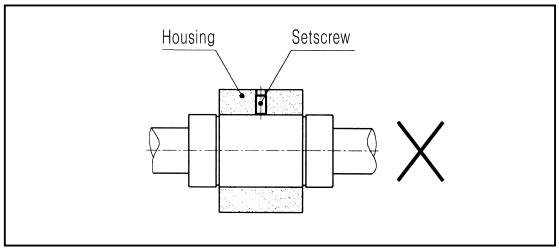

■ Flanged type

It is available for flanged types to be mounted itself only with mounting bolt due to its single body shape.

note) Geometric dimensional tolerance should be considered when outer sleeve is the datum for installation.

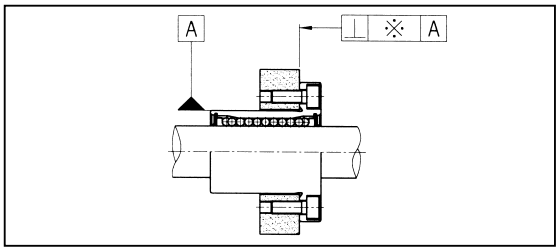

● Mounting from outer sleeve as datum

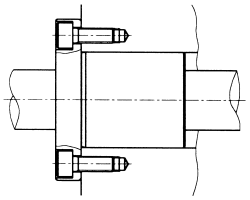

● Mounting of Flange with mounting bolt

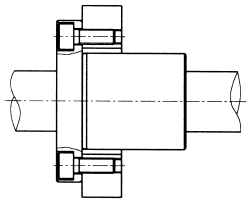

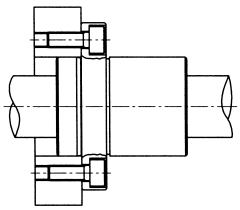

Fig. 9 Mounting of Flanged type

■ Mounting of Adjustable type

Adjustment of clearance for adjustable type(...AJ) and LM shaft can be obtained by assembling with the adjustable type Housing. In the case, the slotted side of Linear Bushing should be located at 90˚of open side of housing for equivalent deformation against radial direction. See Fig.10.

Fig. 10 Mounting of Adjustable type

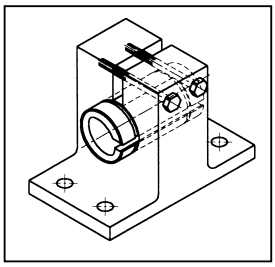

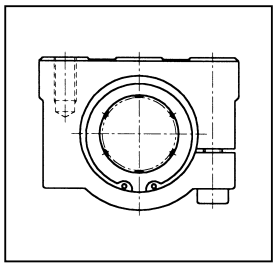

■ Mounting of Open type

Open type (...OP) also can be used with clearance adjustable housing as shown on Fig. 11. Light pre-load is applied for normal using, but heavy pre-load should be avoid.

Fig. 11 Mounting of Open type

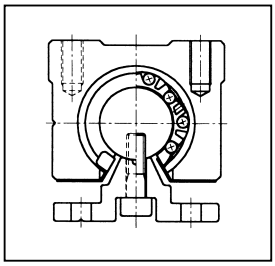

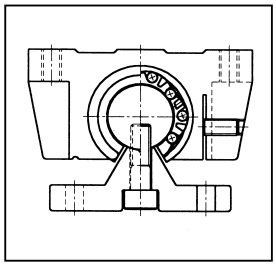

■ Mounting of Shaft support

Shaft support, WK can be mounted with mounting bolt for a table, and LM shaft can be mounted with tightening bolt.

Fig. 12 Mounting of Shaft support

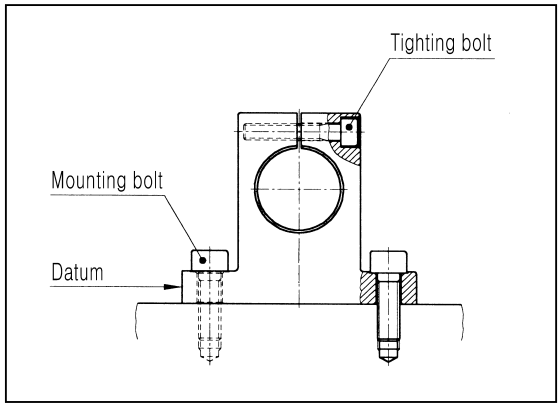

Cautions

■ Mounting of Linear Bushing

For mounting of standard type WON Linear Bushing into the Housing, a jig should be used to avoid direct hitting on the outer sleeve or seal during mounting, See Fig. 13

Fig. 13 Mounting into housing

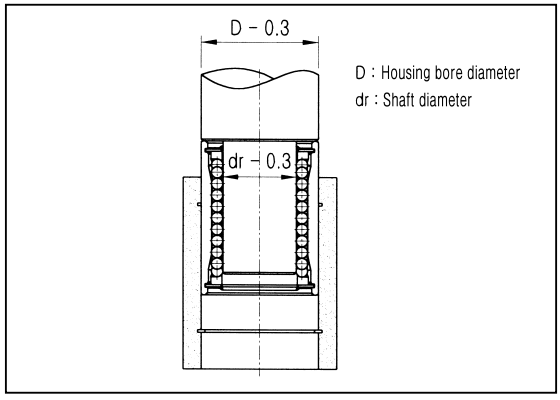

■ Insertion of Shaft

Case must be taken to align when inserting a shaft into a Linear Bushing. If the shaft is inserted slantly, balls may be departed from the damaged or deformed retainer. See Fig. 14

Fig. 14 Insertion of Shaft into Bushing

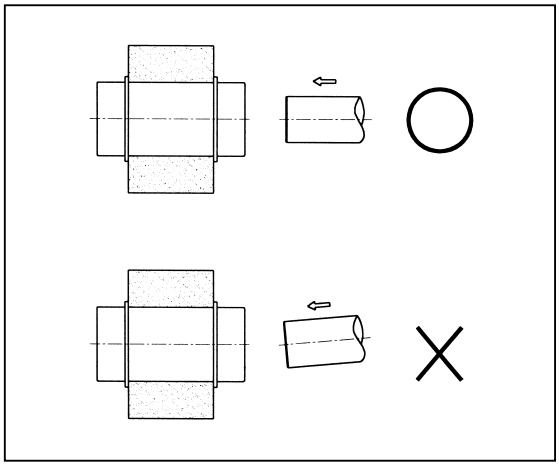

■ When Moment loads applied

External loads should be distributed uniformly on a Linear Bushing. When moment loads are applied, two or more Linear Bushings should be used on one LM shaft, and the distance between two Linear Bushings should have enough distance.

Calculate the equivalent load when the moment loads are applied and choose the proper Linear Bushing. Please refer to the sample calculation for more information.

■ Avoid the Rotaitional Motion

WON Linear Bushing is not suitable for rotational motion. See Fig.15. If the Linear Bushing is exposed to rotational motion, it may lead unexpected accidents.

Fig. 15

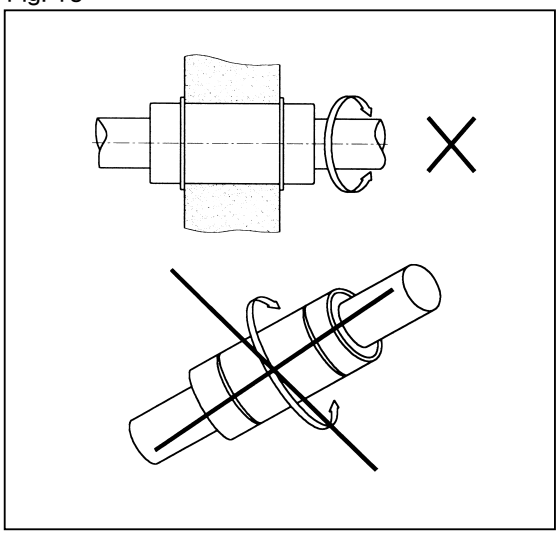

■ Mounting of open type Linear Bushing with three ball rows

Please mount the open type Linear Bushings with three ball circuit as same as Fig. 16 for considering of load distribution.

Fig. 16

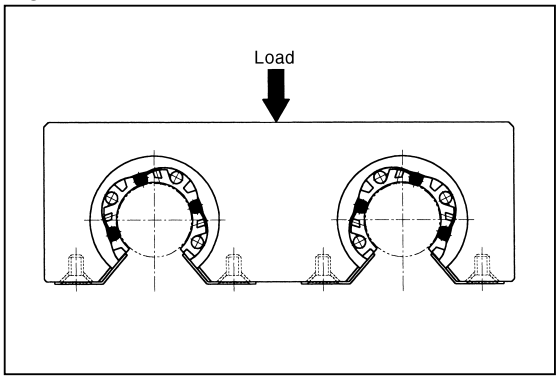

LM type

LM Series

LM　　LM□OP　　LM□AJ

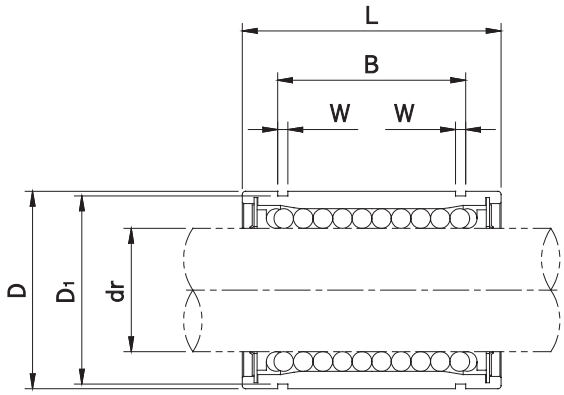

LM Series						Basic Load Ratings		Working Bore Diameter	
Standard type		Open type		Adjustable type		Dyn. C (N)	Stat. Co (N)	dr (mm)	Tol. (μm)
Part No.	No. of Ball circuit	Part No.	No. of Ball circuit	Part No.	No. of Ball circuit				
LM 4	4	-	–	-	–	88.0	108	4	$^{0}_{-8}$
LM 5UU	4	-	–	-	–	167.0	206	5	$^{0}_{-8}$
LM 6UU	4	-	–	LM 6UUAJ	4	200.0	260	6	$^{0}_{-9}$
LM 8SUU	4	-	–	LM 8SUUAJ	4	170.0	220	8	
LM 8UU	4	-	–	LM 8UUAJ	4	260.0	400	8	
LM10UU	4	-	–	LM10UUAJ	4	370.0	540	10	
LM12UU	4	LM12UUOP	3	LM12UUAJ	4	410.0	590	12	
LM13UU	4	LM13UUOP	3	LM13UUAJ	4	500.0	770	13	
LM16UU	5	LM16UUOP	4	LM16UUAJ	5	770.0	1170	16	
LM20UU	5	LM20UUOP	4	LM20UUAJ	5	860.0	1370	20	$^{0}_{-10}$
LM25UU	6	LM25UUOP	5	LM25UUAJ	6	980.0	1560	25	
LM30UU	6	LM30UUOP	5	LM30UUAJ	6	1560.0	2740	30	
LM35UU	6	LM35UUOP	5	LM35UUAJ	6	1660.0	3130	35	$^{0}_{-12}$
LM40UU	6	LM40UUOP	5	LM40UUAJ	6	2150.0	4010	40	
LM50UU	6	LM50UUOP	5	LM50UUAJ	6	3820.0	7930	50	
LM60UU	6	LM60UUOP	5	LM60UUAJ	6	4700.0	9990	60	$^{0}_{-15}$

Note) Plating and Raydent treatment are available

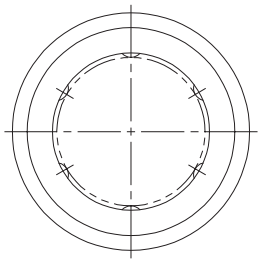

LM

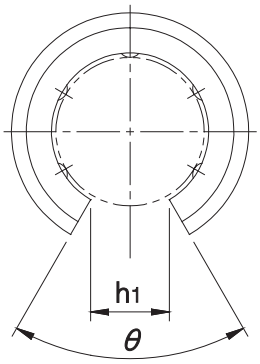

LM□OP

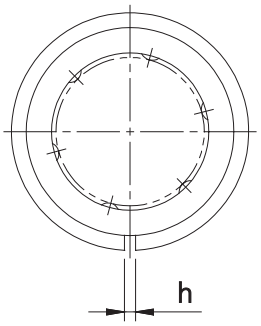

LM□AJ

Unit: mm

Dimensions (mm)												Wgt.※ (gf)	Allowable Diametral Clearance (μm)	Part No.
D		L		B		W	D_1	h	h_1	θ (°)				
(mm)	Tol. (μm)	(mm)	Tol. (mm)	(mm)	Tol. (mm)									
8	$^{0}_{-9}$	12	$^{0}_{-0.12}$	–	–	–	–	–	–	–	1.9	– 3	LM 4UU
10	$^{0}_{-8}$	15	$^{0}_{-0.12}$	10.2	0 −0.2	1.10	9.6	–	–	–	4.0	– 3	LM 5UU
12	0 −11	19	0 −0.2	13.5		1.10	11.5	1.0	–	–	8.0	– 5	LM 6UU
15		17		11.5		1.10	14.3	1.0	–	–	11.0	– 5	LM8SUU
15		24		17.5		1.10	14.3	1.0	–	–	16.0	– 5	LM 8UU
19	0 −13	29		22.0		1.30	18.0	1.0	–	–	30.0	– 5	LM10UU
21		30		23.0		1.30	20.0	1.5	8	80°	31.5	– 5	LM12UU
23		32		23.0		1.30	22.0	1.5	9	80°	43.0	– 7	LM13UU
28		37		26.5		1.60	27.0	1.5	11	80°	69.0	– 7	LM16UU
32	0 −16	42		30.5		1.60	30.5	1.5	11	60°	87.0	– 9	LM20UU
40		59	0 −0.3	41.0	0 −0.3	1.85	38.0	2.0	12	50°	220.0	– 9	LM25UU
45		64		44.5		1.85	43.0	2.5	15	50°	250.0	– 9	LM30UU
52	0 −19	70		49.5		2.10	49.0	2.5	17	50°	390.0	−13	LM35UU
60		80		60.5		2.10	57.0	3.0	20	50°	585.0	−13	LM40UU
80		100		74.0		2.60	76.5	3.0	25	50°	1580.0	−13	LM50UU
90	$^{0}_{-22}$	110		85.0		3.15	86.5	3.0	30	50°	2000.0	−16	LM60UU

※ Based on Standard type

1N ≒ 0.102kgf

LME type

LME Series

LME　　LME□OP　　LME□AJ

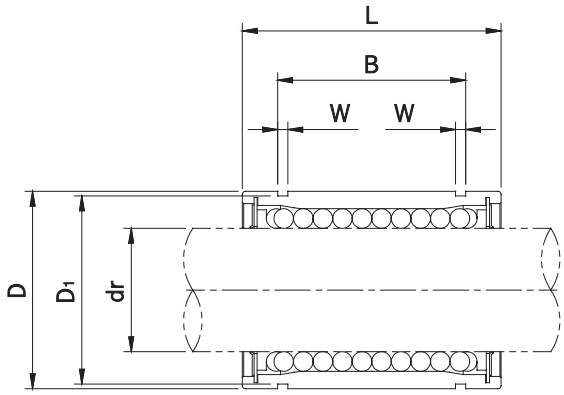

LME Series						Basic Load Ratings		Working Bore Diameter	
Standard type		Open type		Adjustable type		Dyn. C (N)	Stat. Co (N)	dr (mm)	Tol. (μm)
Part No.	No. of Ball circuit	Part No.	No. of Ball circuit	Part No.	No. of Ball circuit				
LME 5UU	4	-	–	LME 5UUAJ	4	200	260	5	+ 8 0
LME 8UU	4	-	–	LME 8UUAJ	4	260	400	8	
LME12UU	4	LME12UUOP	3	LME12UUAJ	4	410	590	12	
LME16UU	5	LME16UUOP	4	LME16UUAJ	5	770	1170	16	+ 9 − 1
LME20UU	5	LME20UUOP	4	LME20UUAJ	5	860	1370	20	
LME25UU	6	LME25UUOP	5	LME25UUAJ	6	980	1560	25	+11 − 1
LME30UU	6	LME30UUOP	5	LME30UUAJ	6	1560	2740	30	
LME40UU	6	LME40UUOP	5	LME40UUAJ	6	2150	4010	40	+13 − 2
LME50UU	6	LME50UUOP	5	LME50UUAJ	6	3280	7930	50	
LME60UU	6	LME60UUOP	5	LME60UUAJ	6	4700	9990	60	

Note) Plating and Raydent treatment are available

Reference of dynamic load rating

Dynamic load rating is based on the nominal life of 50km.
In case of 100km, C on the table need to eb devided by 1.26.

ex)　LME20　　C : 860N　　C_{100} : 682N

$$L = \left(\frac{C}{P}\right)^3 \times 50\text{km},\ L = \left(\frac{C_{100}}{P}\right)^3 \times 100\text{km}$$

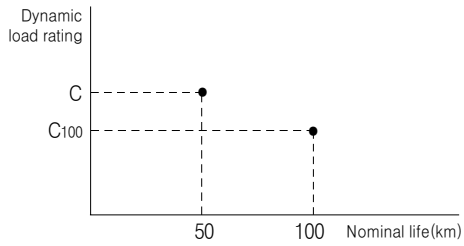

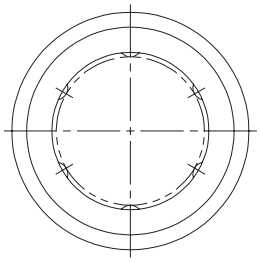

LME

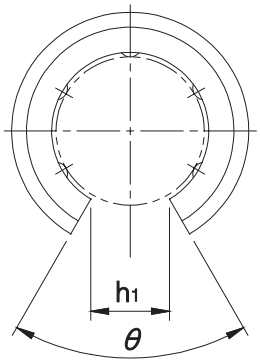

LME□OP

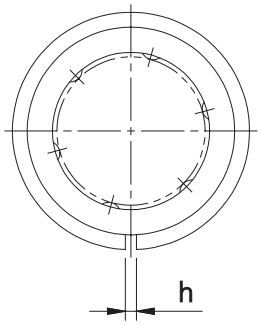

LME□AJ

Unit: mm

Dimensions (mm)											Wgt.※ (gf)	Allowable Diametral Clearance (μm)	Part No.
D		L		B		W	D1	h	h1	θ (°)			
(mm)	Tol. (μm)	(mm)	Tol. (μm)	(mm)	Tol. (μm)								
12	0 / −8	22	0 / −0.2	14.5	0 / −0.2	1.10	11.5	1.0	–	–	12	− 5	LME 5UU
16		25		16.5		1.10	15.2	1.0	–	–	20	− 5	LME 8UU
22	0 / −9	32		22.9		1.30	21.0	1.5	7.5	78°	41	− 7	LME12UU
26		36		24.9		1.30	24.9	1.5	10.0	78°	57	− 7	LME16UU
32	0 / −11	45		31.5		1.60	30.3	2.0	10.0	60°	91	− 9	LME20UU
40		58	0 / −0.3	44.1	0 / −0.3	1.85	37.5	2.0	12.5	60°	215	− 9	LME25UU
47		68		52.1		1.85	44.5	2.0	12.5	50°	325	− 9	LME30UU
62	0 / −13	80		60.6		2.15	59.0	3.0	16.8	50°	705	−13	LME40UU
75		100		77.6		2.65	72.0	3.0	21.0	50°	1130	−13	LME50UU
90	0 / −15	125	0 / −0.4	101.7	0 / −0.4	3.15	86.5	3.0	27.2	54°	2220	−16	LME60UU

※ Based on Standard type

1N ≒ 0.102kgf

LMF/K/H type

Flange Type LMF/K/H Series

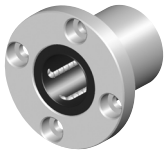

LMF

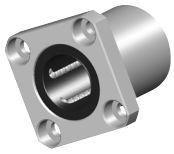

LMK

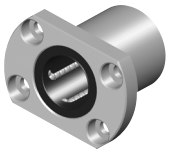

LMH

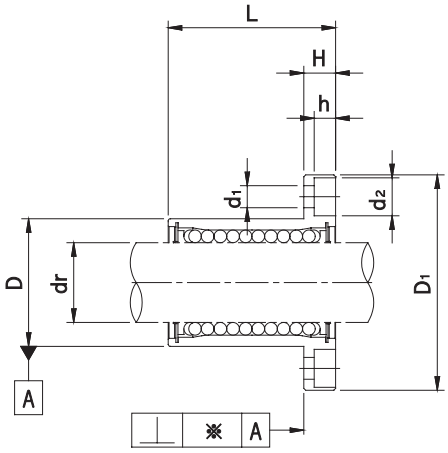

Part No.			No. of Ball circuit	Wgt.※ (gf)	Allowable Diametral Clearance (㎛)	Basic Load Ratings		Working Bore Diameter	
Circular type	Square type	Oval type				Dyn. C (N)	Stat. Co (N)	dr (㎜)	Tol. (㎛)
LMF 6UU	LMK 6UU	-	4	26.5	− 5	200	260	6	0 −9
LMF8SUU	LMK8SUU	-	4	34.0	− 5	170	220	8	
LMF 8UU	LMK 8UU	-	4	40.0	− 5	260	400	8	
LMF10UU	LMK10UU	LMH10UU	4	78.0	− 5	370	540	10	
LMF12UU	LMK12UU	LMH12UU	4	76.0	− 5	410	590	12	
LMF13UU	LMK13UU	LMH13UU	4	94.0	− 7	500	770	13	
LMF16UU	LMK16UU	LMH16UU	5	134.0	− 7	770	1170	16	
LMF20UU	LMK20UU	LMH20UU	5	180.0	− 9	860	1370	20	0 −10
LMF25UU	LMK25UU	LMH25UU	6	340.0	− 9	980	1560	25	
LMF30UU	LMK30UU	LMH30UU	6	460.0	− 9	1560	2740	30	
LMF35UU	LMK35UU	-	6	795.0	−13	1660	3130	35	0 −12
LMF40UU	LMK40UU	-	6	1054.0	−13	2150	4010	40	
LMF50UU	LMK50UU	-	6	2200.0	−13	3820	7930	50	
LMF60UU	LMK60UU	-	6	2960.0	−16	4700	9990	60	0 −15

Note) Plating and Raydent treatment are available

※ The value of Circular type

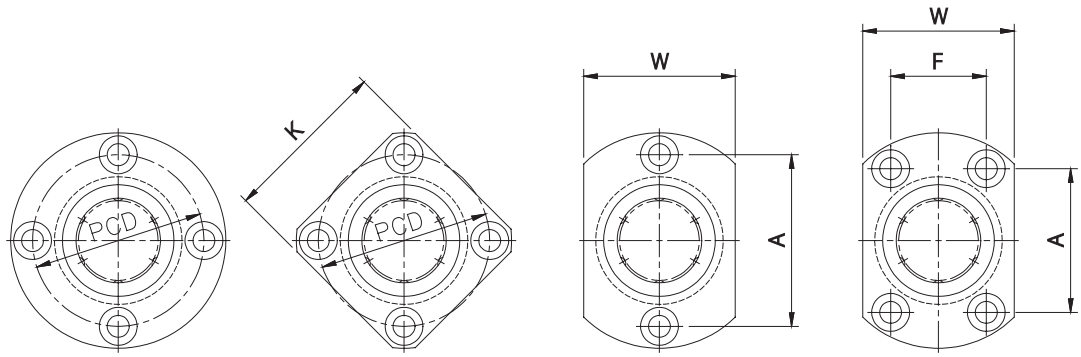

LMF LMK LMH

Unit: mm

Dimensions (mm)														Part No.
D (mm)	D Tol. (μm)	L (mm)	L Tol. (μm)	B (mm)	B Tol. (μm)	H	PCD	K	W	A	F	Sqiareness ※ (μm)	$d_1 \times d_2 \times h$	
12	0 −11	19	0 −0.2	28	0 −0.2	5	20	22	–	–	–	12	3.4× 6.5× 3.3	LMF/K/H6UU
15		17		32		5	24	25	–	–	–	12	3.4× 6.5× 3.3	LMF/K/H8SUU
15		24		32		5	24	25	–	–	–	12	3.4× 6.5× 3.3	LMF/K/H8UU
19	0 −13	29		40		6	29	30	25	29	–	12	4.5× 8.0× 4.4	LMF/K/H10UU
21		30		42		6	32	32	27	32	–	12	4.5× 8.0× 4.4	LMF/K/H12UU
23		32		43		6	33	34	29	33	–	12	4.5× 8.0× 4.4	LMF/K/H13UU
28		37		48		6	38	37	34	31	22	12	4.5× 8.0× 4.4	LMF/K/H16UU
32	0 −16	42		54		8	43	42	38	36	24	15	5.5× 9.5× 5.4	LMF/K/H20UU
40		59	0 −0.3	62		8	51	50	46	40	32	15	5.5× 9.5× 5.4	LMF/K/H25UU
45		64		74		10	60	58	51	49	35	15	6.6×11.0× 6.5	LMF/K/H30UU
52	0 −19	70		82		10	67	64	–	–	–	20	6.6×11.0× 6.5	LMF/K/H35UU
60		80		96	0 −0.3	13	78	75	–	–	–	20	9.0×14.0× 8.6	LMF/K/H40UU
80		100		116		13	98	92	–	–	–	20	9.0×14.0× 8.6	LMF/K/H50UU
90	0 −22	110		134		18	112	106	–	–	–	25	11.0×17.5×10.8	LMF/K/H60UU

1N ≒ 0.102kgf

LMF/K□L type

Flange Type LMF/K□L Series

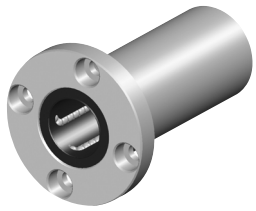

LMF□L

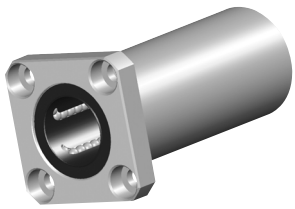

LMK□L

Part No.		No. of Ball circuit	Wgt.※ (g_f)	Allowable Diametral Clearance (㎛)	Basic Load Ratings		Working Bore Diameter	
Circular type	Square type				Dyn. C (N)	Stat. Co (N)	dr (㎜)	Tol. (㎛)
LMF 6LUU	LMK 6LUU	4	31	− 5	320	520	6	0 −10
LMF 8SUU	LMK 8SUU	4	53	− 5	430	780	8	
LMF10LUU	LMK10LUU	4	105	− 5	580	1100	10	
LMF12LUU	LMK12LUU	4	100	− 5	650	1200	12	
LMF13LUU	LMK13LUU	4	130	− 7	810	1570	13	
LMF16LUU	LMK16LUU	5	187	− 7	1230	2350	16	
LMF20LUU	LMK20LUU	5	260	− 9	1400	2750	20	0 −12
LMF25LUU	LMK25LUU	6	515	− 9	1560	3140	25	
LMF30LUU	LMK30LUU	6	655	− 9	2490	5490	30	
LMF35LUU	LMK35LUU	6	970	−13	2650	6470	35	0 −15
LMF40LUU	LMK40LUU	6	1560	−13	3430	8040	40	
LMF50LUU	LMK50LUU	6	3500	−13	6080	15900	50	
LMF60LUU	LMK60LUU	6	4500	−16	7650	20000	60	0 −20

Note) Plating and Raydent treatment are available

※ The value of Circular type

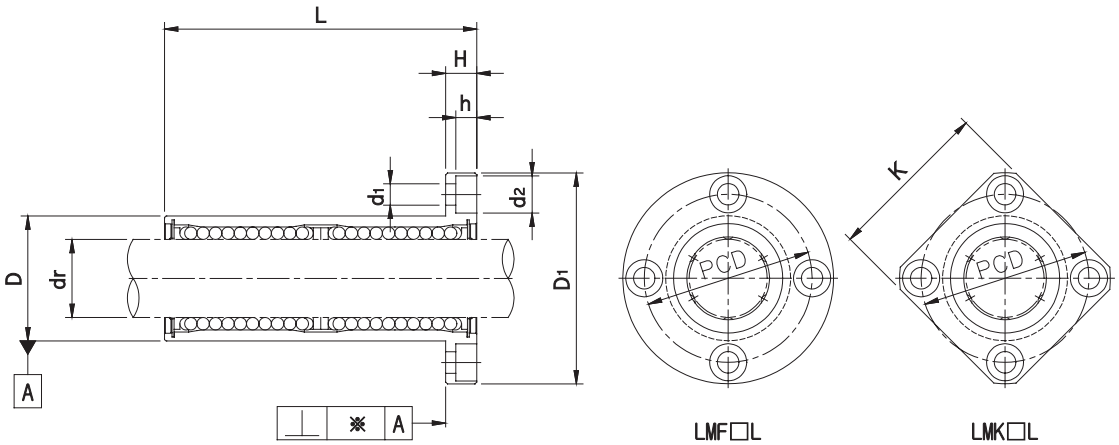

Unit: mm

Dimensions (mm)														Part No.
D		L		B		H	PCD	K	W	A	F	Sqiareness ※ (μm)	$d_1 \times d_2 \times h$	
(mm)	Tol. (μm)	(mm)	Tol. (μm)	(mm)	Tol. (μm)									
12	0 −13	35	0 −0.3	28	0 −0.2	5	20	22	18	20	–	15	3.4× 6.5× 3.3	LMF 6LUU
15		45		32		5	24	25	21	24	–	15	3.4× 6.5× 3.3	LMF 8SUU
19	0 −16	55		40		6	29	30	25	29	–	15	4.5× 8.0× 4.4	LMF10LUU
21		57		42		6	32	32	27	32	–	15	4.5× 8.0× 4.4	LMF12LUU
23		61		43		6	33	34	29	33	–	15	4.5× 8.0× 4.4	LMF13LUU
28		70		48		6	38	37	34	31	22	15	4.5× 8.0× 4.4	LMF16LUU
32	0 −16	80		54		8	43	42	38	36	24	20	5.5× 9.5× 5.4	LMF20LUU
40		112	0 −0.4	62		8	51	50	46	40	32	20	5.5× 9.5× 5.4	LMF25LUU
45		123		74		10	60	58	51	49	35	20	6.6×11.0× 6.5	LMF30LUU
52	0 −19	135		82		10	67	64	–	–	–	25	6.6×11.0× 6.5	LMF35LUU
60		154		96	0 −0.3	13	78	75	–	–	–	25	9.0×14.0× 8.6	LMF40LUU
80		192		116		13	98	92	–	–	–	25	9.0×14.0× 8.6	LMF50LUU
90	0 −22	211		134		18	112	106	–	–	–	25	11.0×17.5×10.8	LMF60LUU

1N ≒ 0.102kgf

LM□L / LME□L type

LM□L / LME□L Series

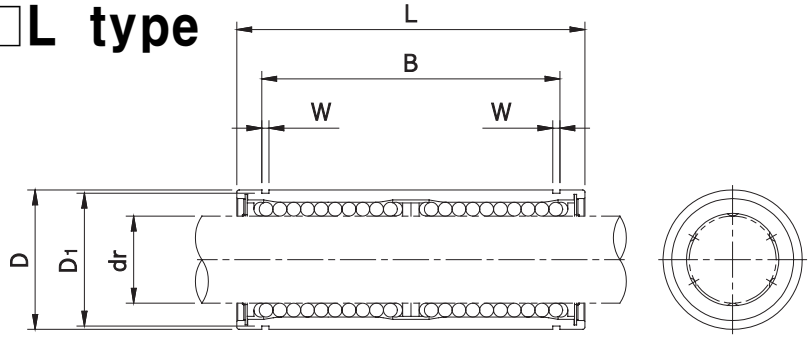

LM□L/LME□L

Unit: mm

LM□L Series		Working Bore Diameter		Dimensions (mm)								Wgt.* (gf)	Basic Load Ratings	
Part No.	No. of Ball circuit	dr (mm)	Tol. (μm)	D (mm)	D Tol. (μm)	L (mm)	L Tol. (μm)	B (mm)	B Tol. (μm)	W	D1		Dyn. C (N)	Stat. Co (N)
LM 6LUU	4	6	0 −10	12	0 −13	35	0 −0.3	27	0 −0.3	1.1	11.5	16	320	520
LM 8LUU	4	8		15		45		35		1.1	14.3	31	430	780
LM10LUU	4	10		19	0 −16	55		44		1.3	18	62	580	1100
LM12LUU	4	12		21		57		46		1.3	20	80	650	1200
LM13LUU	4	13		23		61		46		1.3	22	90	810	1570
LM16LUU	5	16		28		70		53		1.6	27	145	1230	2350
LM20LUU	5	20	0 −12	32	0 −19	80		61		1.6	30.5	180	1400	2750
LM25LUU	6	25		40		112	0 −0.4	82	0 −0.4	1.85	38	440	1560	3140
LM30LUU	6	30		45		123		89		1.85	43	580	2490	5490
LM35LUU	6	35	0 −15	52	0 −22	135		99		2.1	49	795	2650	6470
LM40LUU	6	40		60		154		121		2.1	57	1170	3430	8040
LM50LUU	6	50		80		192		148		2.6	76.5	3100	6080	15900
LM60LUU	6	60	0 −20	90	0 −22	211		170		3.15	86.5	3500	7650	20000
LME□LSeries														
LME8LUU	4	8	+9 −1	16	0/−9	45	0 −0.3	33	0 −0.3	1.1	15.2	31	430	780
LME12LUU	4	12		22	0 −11	57		45.8		1.3	21	80	650	1200
LME16LUU	5	16	+11 −1	26		70		49.8		1.3	24.9	145	1230	2350
LME20LUU	5	20		32	0 −13	80		61		1.6	30.3	180	1400	2750
LME25LUU	6	25	+13 −2	40		112	0 −0.4	82	0 −0.4	1.85	38	440	1560	3140
LME30LUU	6	30		47		123		104.2		1.85	44.5	580	2490	5490
LME40LUU	6	40	+16 −4	62	0 −15	154		121.2		2.15	59	1170	3430	8040
LME50LUU	6	50		75		192		155.2		2.65	72	3100	6080	15900
LME60LUU	6	60		90	0/−20	211		170		3.15	86.5	3500	7650	20000

Note) Plating and Raydent treatment are available

1N ≒ 0.102kgf